Calculation Cover Sheet

1. Document Title:		2. System Number:
Criticality Control Container (CCC) Carbon Steel Structural Analysis		PT01
3. Document Number:	4. Document Revision:	5. Page:
CCO-CAL-0007	1	1 of 24

6. Summary Description

This analysis studies the impact of the proposed carbon steel fabrication option for the Criticality Control Container (CCC). The CCC serves as the particulate confinement boundary for the Criticality Control Overpack (CCO) payload container. The CCO payload assembly is credited for maintaining criticality and shielding safety in the TRUPACT-II (TP-II) and HalfPACT (HP) Safety Analysis Reports (SARs). This analysis compares the structural performance of the tested and certified stainless steel CCC design against the proposed carbon steel CCC design. This comparison ensures that the CCO payload, with carbon steel constructed CCCs, loaded within the TP-II or HP packages, remains compliant with structural regulatory requirements prescribed in 10 CFR 71.

7. Software Usage

	Software Name	Version
1.	N/A	N/A
2.		
3.		
4.		

8. Preparer

Name	Signature	Date
Steve Porter	STEVEN PORTER (Affiliate)	Digitally signed by STEVEN PORTER (Affiliate) Date: 2025.12.03 11:14:17 -08'00'

9. Independent Reviewer(s)

Name	Signature	Date
Kyle Moyant	KYLE MOYANT (Affiliate)	Digitally signed by KYLE MOYANT (Affiliate) Date: 2025.12.03 13:51:52 -07'00'

10. Project Manager

Name	Signature	Date
Scott Burns	ROBERT BURNS (Affiliate)	Digitally signed by ROBERT BURNS (Affiliate) Date: 2026.01.12 10:35:26 -07'00'

11. QA Manager (or Designee)

Name	Signature	Date
Steve Tanner	David S. Tanner	Digitally signed by David S. Tanner Date: 2026.01.12 15:05:03 -07'00'

TABLE OF CONTENTS

1.0 INTRODUCTION 5

2.0 SUMMARY 9

3.0 METHODOLOGY 10

3.1 Method 10

3.2 Inputs 11

3.3 Significant Assumptions 13

3.4 Acceptance Criteria 13

4.0 ANALYSIS 14

4.1 Dynamic Response 14

4.2 Structural Response 20

4.3 Brittle Fracture 20

5.0 REFERENCES 22

6.0 COMPUTER RUNS 24

LIST OF TABLES

Table 3-1 Stainless Steel Material Properties 12
Table 3-2 Carbon Steel Material Properties 13
Table 6-1 – Computer Run Listing 24

LIST OF FIGURES

Figure 1-1 HalfPACT Packaging without Payload 5
Figure 1-2 Criticality Control Overpack Design 7
Figure 4-1 CCC Side Drop Orientation with Load Paths 15
Figure 4-2 CCC End Drop Orientation with Load Path 16
Figure 4-3 CCC Side Drop Acceleration Data [Ref. 5] 19
Figure 4-4 CCC End Drop Acceleration Data [Ref. 5] 19

TABLE OF REVISIONS

Revision Number	Pages Affected	Revision Description
0	All	New Issue
1	12, 21, 22	Updated references 1, 2, and 15 to the latest revisions.

1.0 INTRODUCTION

The TRUPACT-II (TP-II) [Ref. 1] and HalfPACT (HP) [Ref. 2] are U.S. Nuclear Regulatory Commission (NRC) approved Type B packages, Docket Nos. 71-9218 and 71-9279, respectively, for the transport of radioactive waste. They are designed for use by the U.S. Department of Energy (DOE) for the transport of Contact Handled Transuranic (CH-TRU) radioactive waste to the Waste Isolation Pilot Plant (WIPP). The HP packaging is depicted in a quarter cutout view, with various components of interest labeled, in Figure 1-1. Note that the TP-II and HP packagings are effectively identical in design. The HP is essentially a 30-inch shorter version of the TP-II design, where the HP payload cavity can accommodate a single tier 55-gallon drum array (7-pack) and the TP-II payload cavity can accommodate two tiers of 55-gallon drum arrays (14-pack). Figure 1-1 depicts the major design components of the HP packaging, but is applicable to both packaging designs.

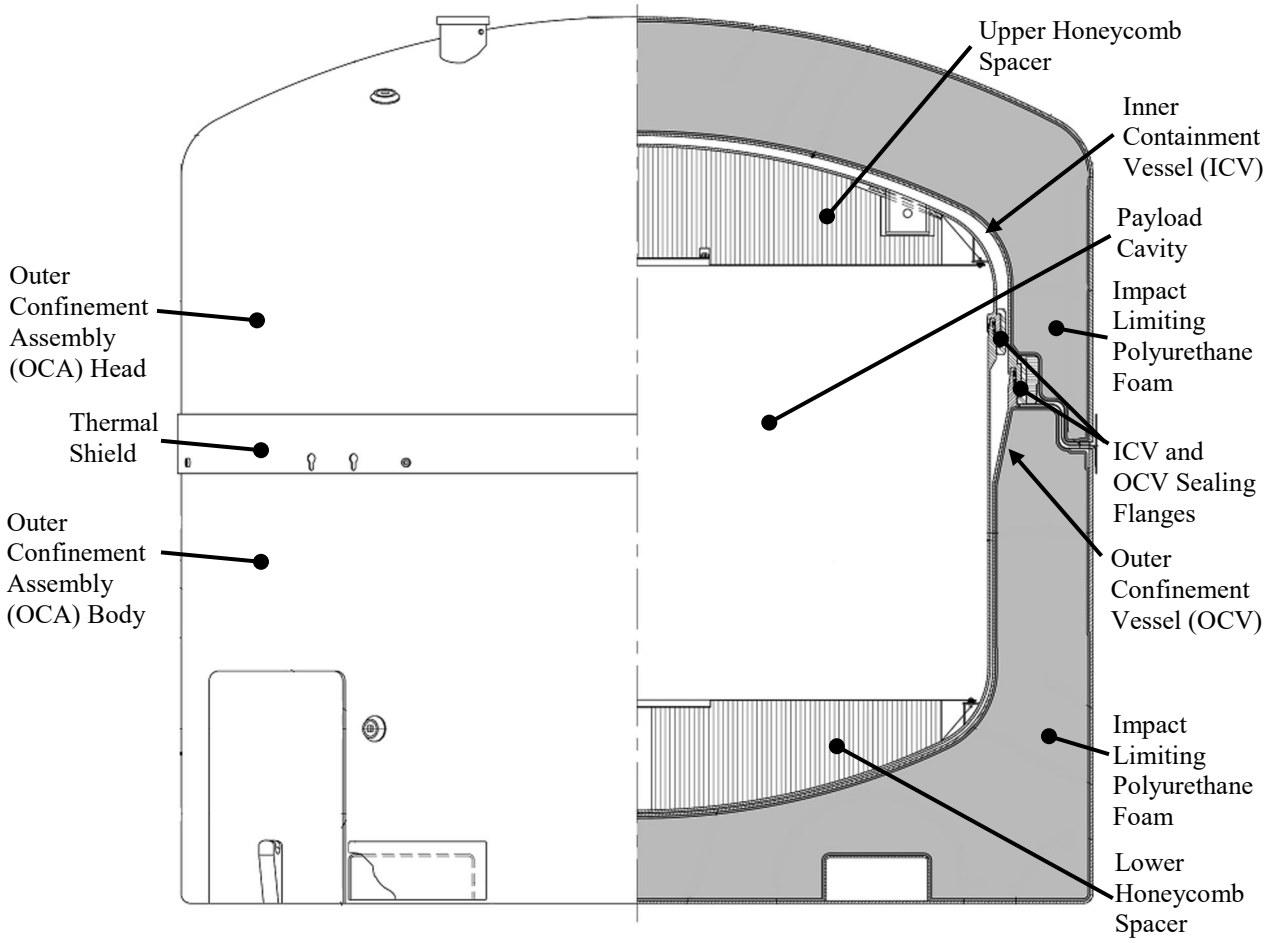

Figure 1-1 HalfPACT Packaging without Payload

The TP-II and HP packagings are described in further detail within their respective SARs [Ref. 1 and 2]. The TP-II and HP packages are designed to carry a variety of payloads within each of their payload cavities. The payloads include 55-gallon drums, 85-gallon drums, 100-gallon drums, Pipe Overpack Containers (POCs), Criticality Control Overpacks (CCOs), Standard Waste Boxes (SWBs), a Ten Drum Overpack (TDOP), or Shielded Containers (SCs). See the Contact Handled Transuranic Waste Authorized Methods for Payload Control (CH-TRAMPAC) [Ref. 4], Section 2.0, for further discussion and high level figures depicting the various approved payload containers.

The CCO payload container is of particular interest for this analysis. The CCO payload container design is depicted in Figure 1-2. The design includes the Criticality Control Container (CCC), which is housed and centered within a standard 55-gallon drum. The CCC is constructed of 6-inch schedule 40 pipe with 6-inch class 150 standard blind and slip-on flanges. The blind flanges serve as the bottom cap and lid, while the slip-on flange serves as the threaded means of joining the lid to the pipe body. The lid is fastened to the slip-on body flange via 8, ¾-inch heavy hex head cap screws and sealed against the body flange with a ring gasket. Upper and lower plywood dunnage caps axially and radially center the CCC within the 55-gallon drum. The CCC serves as the credited particulate retaining boundary for the fissile content within the CCO. The dunnage caps and drum are credited for maintaining the geometric positioning of the CCC array within the payload.

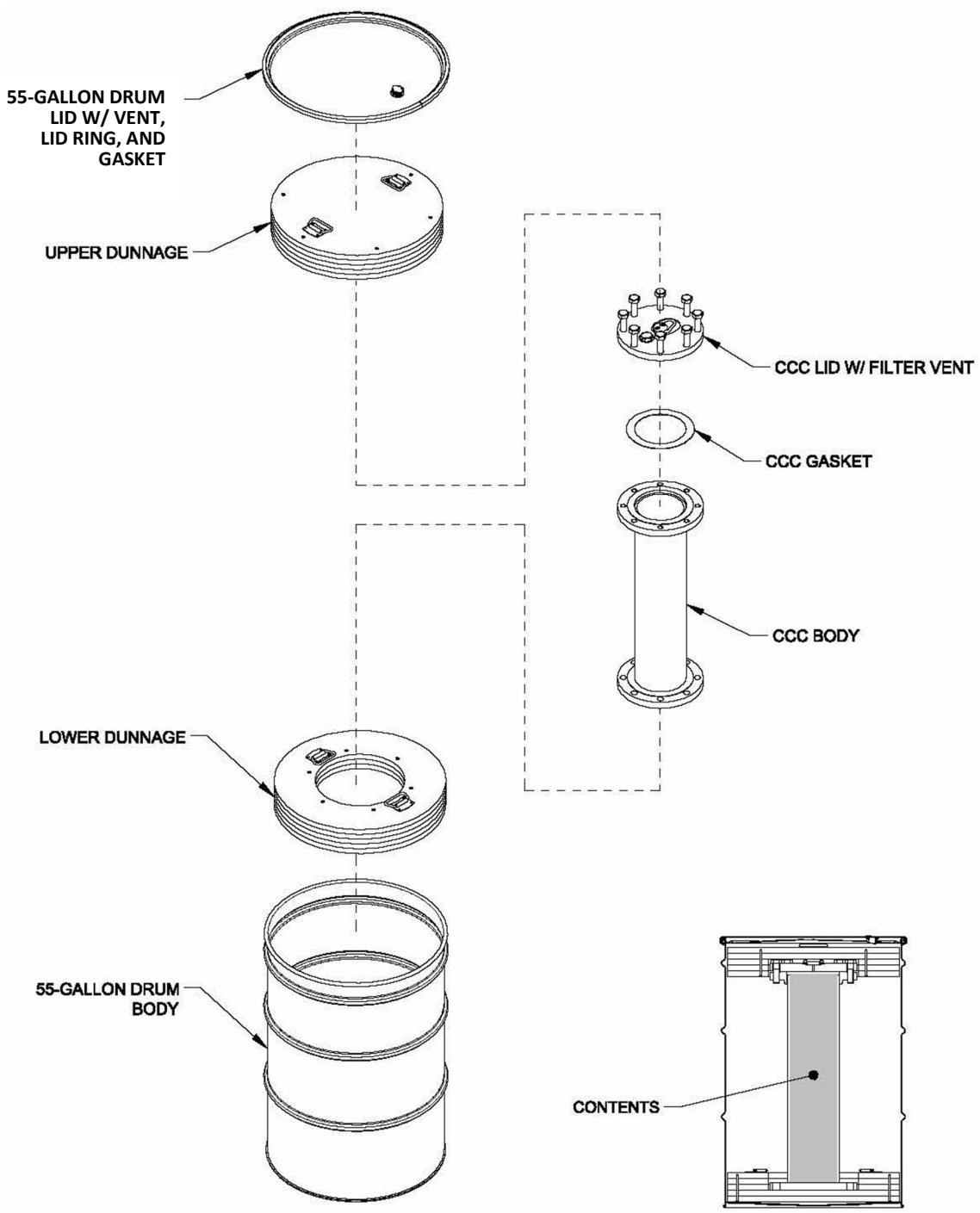

Figure 1-2 Criticality Control Overpack Design

The U.S Department of Energy (DOE) National Nuclear Security Administration (NNSA) at Savannah River Site (SRS) intends to ship up to 48.2[1] metric tons of Diluted Surplus Plutonium (DSP) to the Waste Isolation Pilot Plant (WIPP) [Ref. 14]. The CCO is the payload container selected to ship this waste to the WIPP, due to its combination of high fissile load limit and low cost. The estimated number of CCOs required to dispose of this waste is approximately 138,700[1] units. The original, certification tested design of the CCC was constructed of 304/304L stainless steel. See drawing 163-009 in the current approved revision of the TP-II [Ref. 1] and HP [Ref. 2] Safety Analysis Reports (SARs). In an effort to reduce cost and mitigate the risk of material market fluctuations, an option to construct the CCC of carbon steel has been added to the CCO SAR drawing [Ref. 15]. The purpose of this analysis is to structurally evaluate the CCC design when constructed of the proposed carbon steel for compliance with the requirements delineated in 10 CFR 71.

[1] Note that both the total amount of DSP waste intended for shipment to WIPP, and the estimated number of containers required to ship this waste, are in constant flux. Both values are provided to communicate the scale of waste and CCO units likely required, and thus the motivation behind the added option to fabricate of carbon steel. They are not intended to be precise estimates.

2.0 SUMMARY

The purpose of this section of the report is to provide a summary of the analysis results documented in Section 4.0. In summary, the dynamic analysis in Section 4.1 shows that the CCC, constructed of either stainless or carbon steel, is stiff enough relative to the soft plywood dunnage end caps to both be insensitive to, and prevent, non-linear dynamic amplification effects. The structural analysis in Section 4.2 shows that the carbon steel CCC is expected to perform equivalent, or superior, to the certified stainless steel design. The discussion on brittle fracture in Section 4.3 concludes that the carbon steel material specifications selected for the CCC prevent brittle fracture of the CCC confinement boundary. Therefore the proposed carbon steel design variant of the CCC will perform structurally equivalent to the originally-certified stainless steel design, and the credited structural safety function of the CCO payload in the TP-II and HP SARs will be maintained.

3.0 METHODOLOGY

3.1 Method

The methodology for justifying the addition of carbon steel construction for the CCC of the CCO payload container is a qualitative, and in some cases semi-quantitative, analysis. The defining characteristics to be impacted by the proposed material of construction option for the CCC are addressed and assessed for impact on structural performance. In this case, "performance" is the relative ability of the CCO payload to maintain its credited safety performance in the TP-II and HP packages.

The TP-II and HP packages are unique in the sense that they have several approved payload container and configuration designs. Some payload designs are referred to as "generic", and are covered under the generic package analyses within the main body of the TP-II and HP SARs [Ref. 1 and 2]. The bounding configuration for the generic payload was selected to ensure the worst case configuration was analyzed for each package during the certification process. The generic payloads have no credit for safety function with respect to criticality control or shielding, i.e. are assumed nonexistent within those analyses. However they are still screened in the most bounding configuration to ensure no ill effects on the structural, thermal, and containment performance of each packaging. The generic payload containers include the 55-, 85-, and 100-gallon drums, Standard Waste Boxes (SWBs), and Ten Drum OverPacks (TDOPs). The remaining, "non-generic" payload containers have credit for safety function within each package design, requiring additional payload specific analyses for each. The safety credit includes confinement of the waste within each payload container, and the geometric positioning of each payload container within the package, for both shielding and criticality related safety. The other safety functions (structural, thermal, and containment) are also checked to ensure the payload designs do not compromise the package performance. These performance metrics are included for both Normal Conditions of Transport (NCT) and Hypothetical Accident Conditions (HAC), as specified in 10 CFR 71. Payload specific safety analyses are appended to the generic payload related package safety analyses. The payload specific safety analyses are included in Appendix 4.0 of the CH-TRU Payload Appendices (CPA) [Ref. 3].

The payload specific structural safety basis for the CCO is detailed in Appendix 4.6.3 of the CPA [Ref. 3]. To summarize, the CCO payload was determined to be bound by the generic payload structural analysis for potential impact on the performance of the TP-II and HP packagings. This is due to the bounding weight of the tested, concrete filled, generic 55-gallon drum payload. A single generic 55-gallon drum may weight up to 1,000 lbs [Ref. 4, Table 2.9-3], with the total payload not to exceed 7,265 and 7,600 lbs for the TP-II [Ref. 1, Table 2.2-1] and HP [Ref. 2, Table 2.2-1] packages, respectively. By contrast, the maximum allowed weight of an individual CCO is 350 lbs [Ref. 4, Table 2.9-44]. Since the outermost dunnage component of the CCO assembly is a 55-gallon drum, the CCO is bound by the generic payload analysis for potential impact on the structural response of each packaging design.

As a result, the payload specific structural analysis for the CCO is focused on the payload container's response to NCT and HAC. For NCT, credit is taken for the robust response of the

CCO to HAC conditions, in which no loss of confinement was observed during certification testing. Since the HAC drop conditions bound the NCT drop conditions, no explicit NCT analysis or testing was performed. In addition, the major CCO assembly components are designed to loosely fit together, are vented to preclude pressure buildup, and are generally one-time-use before being permanently emplaced at the WIPP. As a result, differential thermal expansion stresses, pressure differential stresses, and NCT vibrations are of no concern or are bound by HAC conditions. For HAC, prototype CCOs were tested for response to the 30-ft drop test onto a flat, essentially unyielding surface. For additional conservatism, the CCOs were drop tested directly without the impact attenuating protection of the TP-II or HP packagings. These results were then utilized in subsequent shielding and criticality analyses as justification for content confinement credit within each CCC. The impact damage measured was applied to all CCOs within the payload, and utilized to model the reduced array spacing under HAC within each package.

Given the discussion above, the structural evaluation of adding carbon steel as a material of construction for the CCC may then be distilled into a single area of interest. It is to ensure that the CCC is still able to confine the contents without loss during a HAC 30-ft drop event when constructed of the proposed alternate carbon steel material. The strategy for ensuring similar or superior structural performance is to assess the structural response of a carbon steel constructed CCC, and compare to the results obtained through HAC testing of the CCO [Ref. 5]. The three main areas of concentration to ensure that a carbon steel CCC maintains the performance of the originally tested CCO design is as follows:

- Determine if the CCC is sensitive to dynamic impact effects, as discussed in NUREG/CR-3966 [Ref. 12], using the measured response documented in the test report [Ref. 5]
- Compare the expected stress response during impact of the CCC when constructed of either stainless steel or the proposed carbon steel.
- Screen the material specification proposed for the construction of the carbon steel CCC for sensitivity to brittle fracture, as provided in Regulatory Guide 7.11 (RG 7.11) [Ref. 10].

3.2 Inputs

The main inputs to this analysis are as follows:

- The revised CCO SAR drawing [Ref. 15].
- The CCO HAC test report [Ref. 5].
- The currently approved payload specific structural safety basis for the CCO; Appendix 4.6.3 of the CH-TRU Payload Appendices [Ref. 3].
- The guidance on impact analysis provided in NUREG/CR-3966 [Ref. 12].
- The guidance on brittle fracture provided in RG 7.11 [Ref. 10].

As discussed in Section 3.1, the main strategy to justifying the proposed carbon steel construction of the CCC is via comparison with the certified stainless steel design's performance.

The material specifications for the currently certified CCC are specified in SAR drawing 163-009 Rev. 5, which is included in the TP-II [Ref. 1] and HP [Ref. 2] SARs. The proposed added carbon steel material specifications for the CCC are included in SAR drawing 163-009 Rev. 6 [Ref. 15]. The material specifications are ASTM specifications, all of which are directly referenced in this report [Ref. 16-22]. Table 3-1 and Table 3-2 summarize the structural material properties of interest for this analysis. They are the minimum yield and tensile strengths, the typical yield strengths, and the nominal elastic moduli, Poisson's ratios, and densities. The minimum yield and tensile strengths are provided directly from the aforementioned material specifications. The typical yield strengths are provided via a search through the typical mechanical material properties of AISI materials in the MatWeb database [Ref. 23]. For 304/304L materials, the value represents the typical tested yield strengths listed. For carbon steel, the value represents a lower bound typical yield strength, based on low carbon steel tested yield strengths in the normalized condition. The elastic moduli, Poisson's ratio, and densities come from Table TM-1 and Table PRD of Section II, Part D of the ASME Boiler and Pressure Vessel Code [Ref. 7].

Note that these properties are provided at room temperature. For explicit structural analysis, temperature dependent properties would be utilized and interpolated based on the temperatures provided by the thermal analysis. But given the relative insensitivity of the material properties of steel in the temperature range of interest, -20F to +180F, the use of room temperature properties is appropriate for this analysis.

Table 3-1 Stainless Steel Material Properties

Material Specification	Minimum Yield Strength (ksi)	Typical Yield Strength (ksi)	Minimum Tensile Strength (ksi)	Elastic Modulus (10^6 psi)	Poisson's Ratio (unitless)	Density (lb/in^3)
ASTM A182 Grade F304/F304L	25	31.2/30.5	70	28.3	0.31	0.290
ASTM A240 Type 304/304L	25	31.2/30.5	70	28.3	0.31	0.290
ASTM A312 Grade 304/304L	25	31.2/30.5	70	28.3	0.31	0.290

Table 3-2 Carbon Steel Material Properties

Material Specification	Minimum Yield Strength (ksi)	Typical Yield Strength (ksi)	Minimum Tensile Strength (ksi)	Elastic Modulus (10^6 psi)	Poisson's Ratio (unitless)	Density (lb/in^3)
ASTM A266	30	~40	60	29.4	0.30	0.280
ASTM A333 Grade 6	35	~40	60	29.4	0.30	0.280
ASTM A350 LF2 Class 1	36	~40	70	29.4	0.30	0.280
ASTM A516	30	~40	55	29.4	0.30	0.280

3.3 Significant Assumptions

There are no significant assumptions employed in this analysis.

3.4 Acceptance Criteria

The carbon steel material specifications shall be acceptable for construction of the CCC if the structural response of the CCC is equivalent, or superior, when compared to the response of the currently certified design and when subjected to the HAC test requirements of 10CFR71.73 [Ref. 6]. In addition, brittle fracture of the carbon steel material must be precluded to prevent fracture of the CCC confinement boundary, using the guidance provided in RG 7.11 [Ref. 10].

4.0 ANALYSIS

The design of the CCO assembly is such that the outermost component of the payload container is a standard, carbon steel 55-gallon drum. See Figure 1-2. As discussed in Section 3.1, the sole safety basis function of the outer CCO componentry is to maintain array spacing of the content filled CCC confinement boundary within. The structural response of the CCO to the HAC 30-ft drop event has been previously determined as the sole structural regulatory event of concern in Appendix 4.6.3 of the CPA [Ref. 3]. The purpose of this report is to ensure that the optional carbon steel material proposed for construction of the CCC will not negatively impact the structural safety performance of the CCO payload to a HAC event.

To judge the structural acceptability, there are 3 topics analyzed in this report:

1. The dynamic response of the CCC. This is performed to ensure that the alternate material does not introduce the potential for increased dynamic loading during the drop test.
2. The structural response of the CCC to ensure confinement is maintained.
3. Compliance with the brittle fracture requirements of RG 7.11 [Ref. 10]

4.1 Dynamic Response

The area of concern with regard to the dynamic response of the CCO is to ensure that a carbon steel constructed CCC will respond similarly to, or better than, the stainless steel constructed CCC during the HAC 30-ft drop test. NUREG/CR-3966 [Ref. 12] provides discussion on the common analytical methods for dynamic impact analysis of shipping containers. As discussed in the report, the proportion of the dynamic deflection relative to the idealized, static deflection of the same dynamically-applied load is the Dynamic Amplification Factor (DAF). The DAF is a function of the rise time of the applied load, duration of the load, the shape of the load, and the natural period of the structure. Figure 2.3 of the report captures the DAF as a function of the impact load duration to structural response period ratio for a triangularly shaped load input. A triangularly shaped impact load is most the appropriate for comparison to the actual, measured impact acceleration of the CCC in the drop test report [Ref. 5]. As seen in the figure, from a ratio of ~2 and beyond, the DAF of the structure fluctuates from 1.0 to 1.2 maximum, and is decaying to 1.0 the higher the ratio. The maximum DAF occurs when the impact load duration to structural response period ratio is equal to ~1.0, which correlates with an impact forcing function applied that is equal to the natural frequency of the structure. In general, the longer the impact load period in proportion to the response of the relatively rigid cask, the closer the response load is to the equivalent crushing load of the impact limiter. Therefore, the cask is less sensitive to small changes in stiffness, and the peak impact load remains quasi-static, which makes for a relatively simple comparison.

In this sense, the CCC may be abstracted as a cask structure, where the plywood end caps are similar to the impact limiters of a typical transport cask. This is due to the similar arrangement of a stiff, metallic cylindrically shaped vessel surrounded on either end by relatively soft, impact attenuating material. Further, in the HAC drop test report [Ref. 5], the impact accelerations on

the CCC were measured via accelerometers mounted on the bodies of the CCC test units. Therefore the as-tested acceleration response of the CCC is already known. This data will be utilized to ensure that the impact period is long enough, relative to the natural response of the CCC, to validate the CCC impact load as quasi static and insensitive to small changes in CCC stiffness. If valid, then the natural frequencies for the CCC in stainless and carbon steel construction are compared to ensure relative parity.

The modal response of a structure is correlated with the section properties of the geometry, the mass of the structure, and the elasticity of the material. The revised drawing [Ref. 15] shows no change in the geometry of the CCC design. The first mode frequency of the stainless steel CCC, in both the side bending and axial orientations, are computed. The CCC, in both the side and end drop orientations, are abstracted based on the load path and end support. Figure 4-1 and Figure 4-2 depict the side and end drop tested load paths, respectively. In the side drop orientation, the CCC is abstracted as a simply supported beam with uniformly applied load. In the end drop orientation, the CCC is abstracted as a column with one end fixed and the other free.

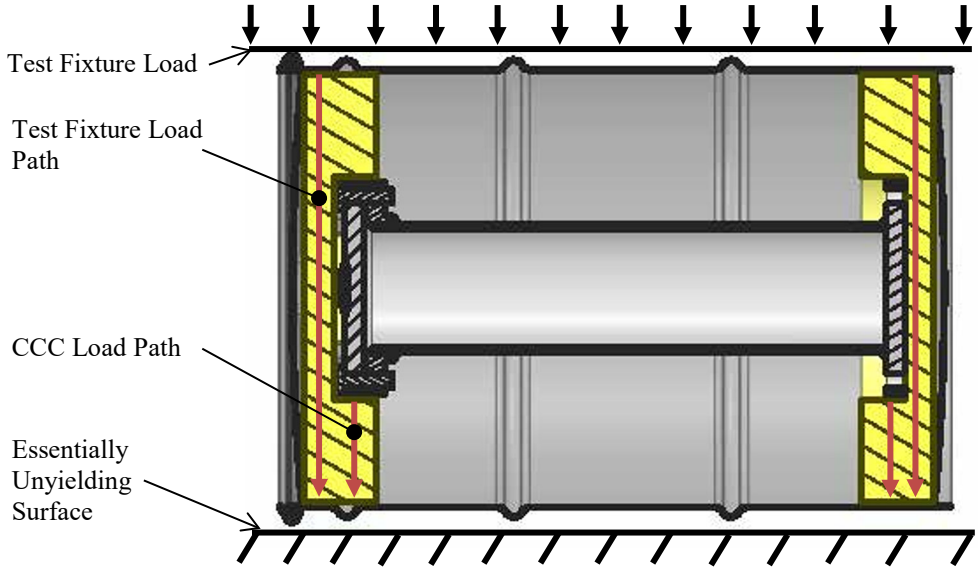

Figure 4-1 CCC Side Drop Orientation with Load Paths

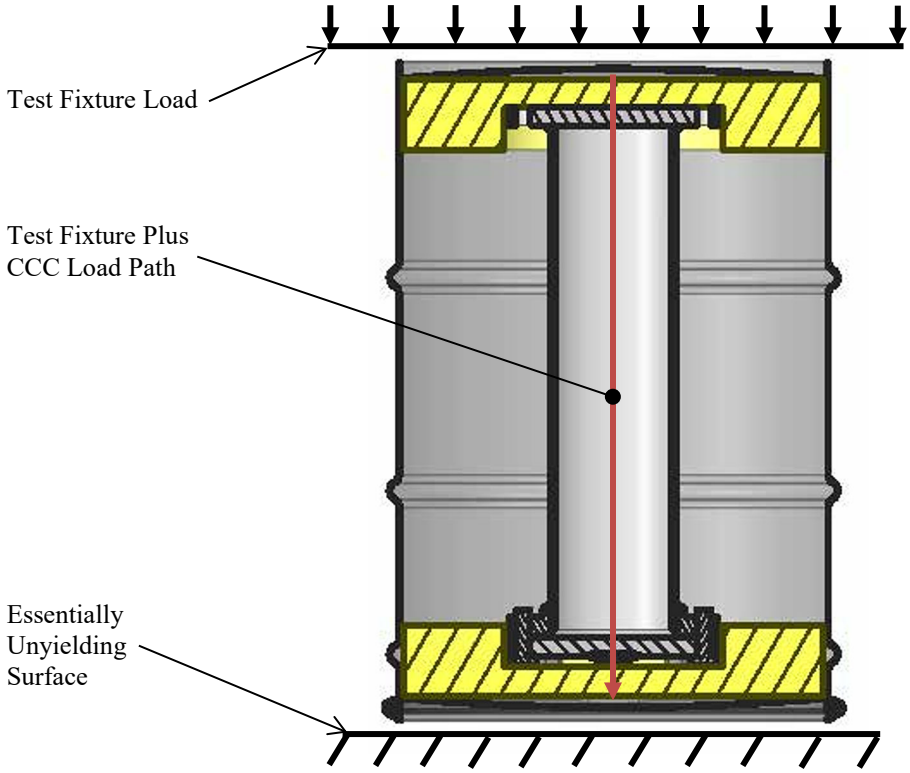

Figure 4-2 CCC End Drop Orientation with Load Path

The equations from Case No. 1b. and 7c. of Table 16.1 from Roark's Formulas for Stress and Strain [Ref. 13] are utilized herein. Case No. 1b. is for a simply supported beam with uniform load per unit length along the beam. The equation is as follows:

$$f_n = \frac{K_n}{2\pi}\sqrt{\frac{EIg}{wL^4}} \tag{1}$$

Where f_n is the natural frequency for mode n, K_n is the empirical constant for the equation associated with mode n, E is the material modulus of elasticity, I is the area moment of inertia, g is the gravitational constant, w is the weight per unit length, and L is the beam length. For the purposes of identifying the first mode frequency, n is equal to 1 and K_n is therefore 9.87 per the provided lookup table in Roark's handbook associated with this case. The material modulus comes from Table 3-1. The area moment of inertia, I, is computed using the sectional properties for the 6-inch schedule 40 pipe from ASME B36.10 [Ref. 8]. The outer diameter is 6.625-inches and the nominal wall thickness is 0.280-inch. The resulting area moment of inertia is:

$$I = \frac{\pi}{64}((6.625in)^4 - (6.625in - 2 * 0.280in)^4) = 28.142in^4$$

(2)

The gravitational constant, g, is 386.1 in/s^2. The length of the beam L is the length of the pipe, which is 26.5-inches. The weight per unit length of the beam, w, is the weight of the pipe section of the CCC plus the maximum weight of the contents within. The weight of the contents is assumed evenly distributed. Per the CCO test report [Ref. 5], 137 pounds of lead shot and sand were loaded into the test units to bring the total CCO weight up to 352 pounds. This is conservatively higher than the maximum weight allowed in the CH-TRAMPAC [Ref. 4] Table 2.9-44, which is 350 pounds. The weight of the simulated contents during the test are utilized herein. The weight of the pipe is computed using the displaced volume of the pipe wall and the density from Table 3-1. The weight per unit length of the beam is:

$$w = \frac{\left(\frac{\pi}{4}((6.625in)^2 - (6.625in - 2*0.280in)^2)(26.5in)\right)\left(0.290\frac{lb}{in^3}\right) + (137lb)}{26.5in} = 6.79\frac{lb}{in}$$

(3)

The resulting beam bending first mode natural frequencies of the CCC, using equation (1) with the inputs above, in stainless steel is 476 Hz. The natural period is the inverse of the natural frequency. Therefore the beam bending natural period for the first mode of the CCC in stainless steel is 2.10 ms.

Table 16.1, Case No. 7c, from Roark's is for a uniform bar vibrating axially with a concentrated weight at one end and fixed at the other end. The equation is as follows:

$$f_1 = \frac{1}{2\pi}\sqrt{\frac{AEg}{WL + \frac{wL^2}{3}}}$$

(4)

Where f_1 is the natural frequency of the first mode, A is the cross sectional area of the bar, E is the material modulus of elasticity, g is the gravitational constant, W is the concentrated weight at the end of the bar, L is the length of the bar, and w is the weight per unit length of the bar itself. The material modulus of elasticity, E, the gravitational constant, g, and the length of the pipe, L, are recycled from the calculations above. The cross sectional area of the pipe, A, is computed as follows:

$$A = \frac{\pi}{4}((6.625in)^2 - (6.625in - 2 * 0.280in)^2) = 5.581in^2$$

(5)

The concentrated weight at the end of the bar, W, is modeled as the weight of the blind flange at the bottom of the CCC. The weight of the blind flange at the bottom of the CCC is approximated using the dimensions in ASME B16.5 [Ref. 9] for a 6-inch Class 150 blind flange and the material density listed in Table 3-1. It is computed as follows:

$$W = \left(\frac{\pi}{4}(8.50in)^2(1.00in) + \frac{\pi}{4}((11.00in)^2 - (8.50in)^2)(0.94in) - 8\frac{\pi}{4}(0.750in)^2(0.94in)\right)\left(0.290\frac{lb}{in^3}\right) = 26.0lb \quad \textbf{(6)}$$

The weight per unit length of the bar, w, is the weight of the pipe of the CCC per unit length. In the inverted, axial drop orientation of the CCO, the weight of the contents impacts the lid of the CCC. Loose aggregate like contents would likely apply radial pressure to the inner wall of the CCC pipe during an axial impact. Due to Poisson's effect, the radial pressure would have an axial stiffening effect on the pipe. However, given the CCC material of construction and robust geometry, this effect is treated as negligible. The weight per unit length of the CCC pipe is:

$$w = \left(\frac{\pi}{4}((6.625in)^2 - (6.625in - 2*0.280in)^2)\right)\left(0.290\frac{lb}{in^3}\right) = 1.62\frac{lb}{in} \quad \textbf{(7)}$$

Using equation (4), the resulting uniform bar with concentrated end weight, axial natural frequencies of the CCC in stainless steel is 1.20 kHz. The corresponding natural period is 0.832 ms.

To validate the insensitivity of the CCC to a small change in stiffness, we must compare to the observed response of the CCC during the HAC drop testing [Ref. 5]. Appendix E of the report presents the accelerometer data for both the side and end drop impact tests. This data is depicted in Figure 4-3 and Figure 4-4 for convenience. For the side drop, the data from two accelerometers mounted to the axial center of the CCC pipe body data are presented. Of the two, the data with the shorter response period is used for conservatism, which is the base data. The impact acceleration begins at approximately 6ms, and ends at approximately 13ms, making the first full cycle period approximately 7ms. For the end drop, the impact cycle begins at approximately 8ms, and ends at approximately 16ms, making the first full cycle period approximately 8ms.

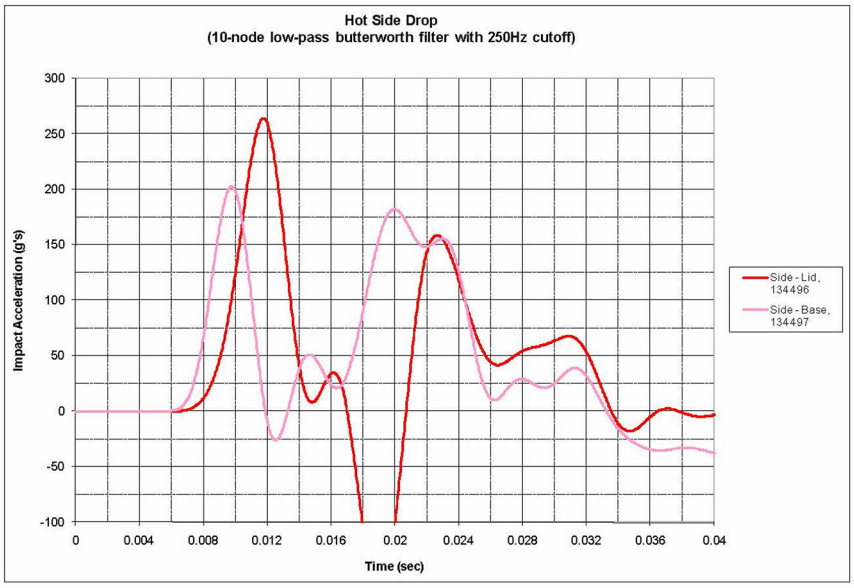

Figure 4-3 CCC Side Drop Acceleration Data [Ref. 5]

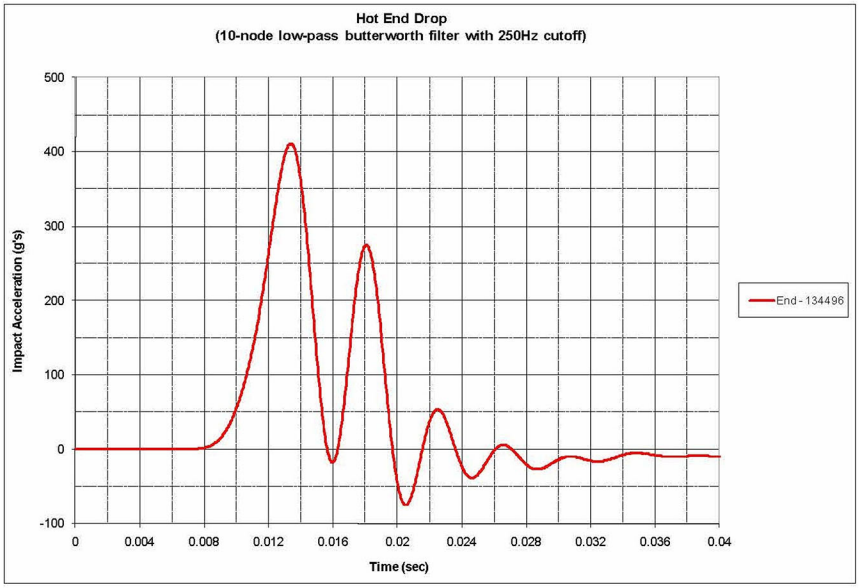

Figure 4-4 CCC End Drop Acceleration Data [Ref. 5]

The ratios of the natural periods for the computed CCC in stainless steel, relative to the tested impact acceleration periods measured in the test, are compared. The lowest ratio is for the CCC in the side drop orientation at 3.33. The highest ratio is for the CCC in the axial drop orientation at 9.62. When compared to the DAF to natural period ratio values provided in Figure 2.3 of

NUREG/CR-3966 [Ref. 12], the bending natural period ratio is associated with a DAF of approximately 1.17. This value occurs after the local peak DAF of ~1.19 at a natural period ratio of ~3.0, indicating that the curve is descending to 1.0 for stiffer structures. The axial natural period is well outside the figures provided data, where the associated DAF values decay to 1.0.

As mentioned above, the only proposed change in design that could impact the natural frequency response of the CCC structure is the optional carbon steel material and associated elasticity. Equations (1) and (4) indicated that in both the bending and axial directions, the natural frequency is proportional to the square root of the material's elastic modulus. Therefore, the expected change in natural frequency due to the change from stainless steel to carbon steel is as follows.

$$\sqrt{\frac{29.4E6\ psi}{28.3E6\ psi}} - 1 = +1.9\%$$

The result is that the CCC constructed of carbon steel is expected to respond similarly to the stainless steel CCC prototype tested and documented in the test report [Ref. 5].

4.2 Structural Response

The analysis in Section 4.1 determined that any difference in dynamic amplification effects are negligible and that the unit may be assumed to respond in a quasi-static fashion. The last variable to consider in assessing the proposed optional change in CCC material is the structural response to the impact load. As noted in the CCO drop test report [Ref. 5], no permanent damage was visually observed in either the side drop or end drop CCC test units. This provides a good indication that gross plastic deformation of the CCC was either avoided, or small enough to be considered negligible.

In comparing the minimum yield strengths provided in Table 3-1 and Table 3-2, carbon steel provides additional strength prior to the onset of plastic behavior. However, a better comparison is the typical yield strength values provided in the same tables. These values are better representations of what the expected yield strengths are for as manufactured test units. Similar to the minimum yield strengths, the typical yield strength of carbon steel is also higher than for stainless steel. Therefore, the carbon steel provides more margin against the potential for yield in the pipe body than does stainless steel, and the carbon steel constructed CCC is expected to perform equivalent to, if not superior to, the certified stainless steel CCC design.

4.3 Brittle Fracture

Regulatory Guide 7.11 (RG 7.11) [Ref. 10] provides guidance on the determination and prevention of brittle fracture for ferritic steel containment vessels up to a maximum wall thickness of 4-inches. The analytical basis and background information for the guidance is provided in NUREG/CR-1815 [Ref. 11]. The concern is that during a HAC event, the containment vessel's material may transition from ductile to brittle mechanical behavior. The

initial condition of a HAC drop event may be from -20°F to +100°F ambient environment, whichever is more conservative for the case being analyzed per 10CFR71.73(b). For the purposes of brittle fracture, the nil ductile transition temperature for some ferritic steels may occur at temperatures above -20°F, depending on alloying constituents, heat treatment, and mill processing technique. When combined with the severe plastic strains that may occur during the HAC drop and puncture testing, a brittle containment vessel risks a violent rupture rather than the ductile deformation typically expected. The 300 series austenitic stainless steels are not susceptible to brittle fracture at the temperatures of interest for transport, per Section B of RG 7.11.

As mentioned in the introduction section of RG 7.11 [Ref. 10], the guide is applicable to containment vessels only and not to other components of the package. However, for conservatism, the guidance provided in RG 7.11 to prevent brittle facture is applied to the CCC, which is the safety basis credited confinement boundary for the CCO. For the nominally 0.280-inch thick CCC pipe body, the guidance provided in Table 5 of RG 7.11 for Category II containment vessels, in thicknesses between 0.19-inch and 0.625-inch, is applicable to prevent fracture initiation of incipient cracks under dynamic loading. As discussed in Section 4.2, no visual gross plastic deformation of the CCC was observed during the HAC certification drop testing. Therefore the level of fracture toughness provided by the guidance in Table 5 for the pipe body is acceptable. For the nominally 1-inch thick blind and slip on flanges, the guidance provided in Table 6 of RG 7.11 for Category III containment vessels, in thicknesses between 0.4-inch and 4.0-inches, is applicable to prevent fracture initiation at minor defects typical of good fabrication practices. As discussed in Section 4.1, the flanges are not constrained in such a manner as to develop significant dynamic tensile stresses and are predominantly loaded in dynamic compression during the HAC. Therefore the level of fracture toughness provided by the guidance in Table 6 for the flanges is acceptable. The guidance provided in both tables may be distilled to the use of low carbon steel, with a yield strength no greater than 100 ksi, and normalized to fine grain practice. That criteria is utilized in the selection of material specifications for the CCC.

There are four carbon steel material specifications optionally proposed for the construction of the CCC and are referenced directly in this report [Ref. 19-22]. Two of the references, ASTM A266 [Ref. 19] and ASTM A516 [Ref. 21], are for carbon steel pressure vessel forgings and plates, respectively. They are additionally specified as furnished in the normalized to fine grain practice condition in the drawing. The other two references, ASTM A333 Grade 6 [Ref. 22] and ASTM A350 Grade LF2 Class 1 [Ref. 20], are for carbon steel pipe and forgings, respectively, specifically for low temperature service. Both specification include requirements for notch toughness testing to preclude brittle transition above the intended service temperature of the product. In both cases, the grade and class of materials are tested for notch toughness at -50°F, which is far below the initial condition temperature for a HAC event of -20°F.

As a result of the discussion above, the CCC fabricated from the proposed carbon steel specifications included in the revised CCO drawing [Ref. 15] are compliant with the guidance provided in RG 7.11 [Ref. 10] and not expected to be susceptible to brittle fracture in the temperatures of interest.

5.0 REFERENCES

Documents

1. U.S. Department of Energy (DOE), *TRUPACT-II Safety Analysis Report*, Revision 27, 2025.
2. U.S. Department of Energy (DOE), *HalfPACT Safety Analysis Report*, Revision 10, 2025.
3. U.S. Department of Energy (DOE), *CH-TRU Payload Appendices*, Revision 5, 2022.
4. U.S. Department of Energy (DOE), *CH-TRAMPAC*, Revision 6, 2022.
5. Petersen Incorporated Test Report, *Criticality Control Overpack 30-Foot Free Drop Post-Test Summary Report*, 8448-R-001, Revision 1, 2011.
6. Title 10, Code of Federal Regulations, Part 71 (10CFR71), *Packaging and Transportation of Radioactive Material*, 2022.
7. ASME Boiler and Pressure Vessel Code, Section II, Part D, *Materials*, 2019.
8. ASME, *Welded and Seamless Wrought Steel Pipe*, ASME B36.10M, 2018.
9. ASME, *Pipe Flanges and Flanged Fittings*, ASME B16.5, 2013.
10. U.S. Nuclear Regulatory Commission (NRC), *Fracture Toughness Criteria of Base material for Ferritic Steel Shipping Cask Containment Vessels with a Maximum Wall Thickness of 4 Inches*, Regulatory Guide 7.11, 1991.
11. Lawrence Livermore National Laboratory, *Recommendations for Protecting Against Failure by Brittle Fracture in Ferritic Steel Shipping Containers Up to Four Inches Thick*, NUREG/CR-1815, 1981.
12. Lawrence Livermore National Laboratory, *Methods for Impact Analysis of Shipping Containers*, NUREG/CR-3966, 1987.
13. Young, Warren C., Budynas, Richard G., Sadegh, Ali M., *Roark's Formulas for Stress and Strain*, 8th Edition, McGraw-Hill, 2012.
14. National Academies of Sciences, Engineering, and Medicine, *Review of the Department of Energy's Plans for Disposal of Surplus Plutonium in the Waste Isolation Pilot Plant*, The National Academies Press, Washington, D.C., 2020.

Drawings

15. Salado Isolation Mining Contractors, *Criticality Control Overpack SAR Drawing*, 163-009, Revision 6, 2025.

Material Specifications

16. ASTM International, *Standard Specification for Forged or Rolled Alloy and Stainless Steel Pipe Flanges, Forged Fittings, and Valves and Parts for High-Temperature Service*, ASTM A182, 2010.

17. ASTM International, *Standard Specification for Chromium and Chromium-Nickel Stainless Steel Plate, Sheet, and Strip for Pressure Vessels and for General Applications*, ASTM A240, 2019.
18. ASTM International, *Standard Specification for Seamless, Welded, and Heavily Cold Worked Austenitic Stainless Steel Pipes*, ASTM A312, 2017.
19. ASTM International, *Standard Specification for Carbon Steel Forgings for Pressure Vessel Components*, ASTM A266, 2011.
20. ASTM International, *Standard Specification for Carbon and Low-Alloy Steel Forgings, Requiring Notch Toughness Testing for Piping Components*, ASTM A350, 2018.
21. ASTM International, *Standard Specification for Pressure Vessel Plates, Carbon Steel, for Moderate- and Lower-Temperature Service*, ASTM A516, 2017.
22. ASTM International, *Standard Specification for Seamless and Welded Steel Pipe for Low-Temperature Service and Other Applications with Required Notch Toughness*, ASTM A333, 2018.
23. MatWeb, *Material Property Data*, https://www.matweb.com, 2022.
24. U.S. Department of Agriculture Forest Service, *Wood Handbook Wood as an Engineering Material*, FPL-GTR-190, Centennial Edition, 2010.

6.0 COMPUTER RUNS

Table 6-1 – Computer Run Listing[2]

Software	Name/Description/Run Time and Date/Machine Name	File Type	File Name
N/A	N/A	N/A	N/A

[2] The files listed in this table are electronically attached to this document in the document management system.